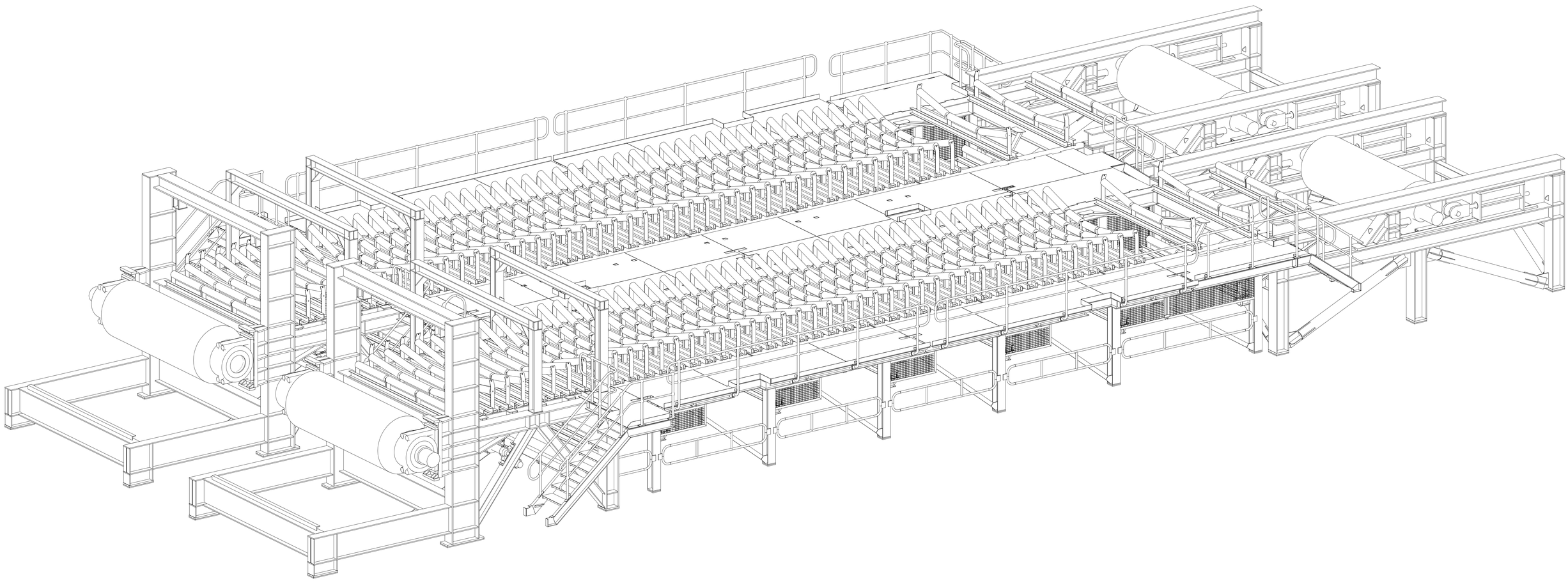
B1 ▼ INDICATES LOCATION OF MARK NUMBER FOR ORIENTATION



THIS SCALE FULL SIZE ON ORIGINAL DRAWING
0 20 40 60 80 100 120 140 160 180 200 220 240 MILLIMETRES

REFERENCE DRAWINGS:

08116-4100...NORTH/WEST OVERALL ISOMETRIC
08116-4101...FE04 ISOMETRICS
08116-4102...FE05 ISOMETRICS
08116-4103...FRAME/COLUMN BASE PLATE MARKING PLAN
08116-4104...STEELWORK MARKING PLAN
08116-4105...FLOOR PLATE MARKING PLAN
08116-4106...BELT PROFILES ON FE04 & FE05
08116-4107...SECTION THRU CONVEYOR FE04 & FE05
08116-4108...SECTION THRU GRID 1 & 3
08116-4109...SECTION THRU GRID 5 & SECTION A-A
08116-4110...SECTIONS B-B & C-C
08116-4111...SECTION D-D AND SECTION THRU GRID B
08116-4112...SECTION THRU GRID C & D
08116-4113...SECTIONS E-E & F-F
08116-4114...SECTIONS G-G & H-H
08116-4115...SECTIONS J-J & K-K
08116-4116...SECTIONS L-L & M-M
08116-4117...SECTIONS N-N & P-P
08116-4118...SOUTH/EAST OVERALL HANDRAIL ISOMETRIC
08116-4119...NORTH/WEST OVERALL HANDRAIL ISOMETRIC
08116-4120...HANDRAIL MARKING PLAN
08116-4121...MISCELLANEOUS DEATILS

REV	DETAILS OF REVISION	NAME	DATE	VARIATION NO.
A	ISSUED FOR CONSTRUCTION	J.DIMMOCK	18.06.2009	XX
0	ISSUED FOR APPROVAL	J.DIMMOCK	06.04.2009	XX

CLIENT:

CLIENT:

GENERAL NOTES
1. ALL DIMENSIONS ARE IN mm. U.N.O.
2. FLAME CUT SURFACES TO BE UNIFORM AND CLEAN BEFORE WELDING
3. ALL FILLET WELDS TO BE 6 mm CONTINUOUS U.N.O.
4. ALL FILLETS TO BE A MINIMUM OF 11 rad. U.N.O.
5. ALL ASSEMBLIES TO BE CLEARLY MARKED.
6. ALL MATERIAL TO BE TO A.S. 4100
7. FOR SURFACE TREATMENT REFER TO PAINT SPECIFICATIONS
8. ALL WORKMANSHIP & WELDING SHALL BE IN ACCORDANCE WITH AS 4100 & AS 1554 PART 1 CAT. SP

EDC CLIENT:

DO NOT SCALE
PROJECTION

Newcastle
Ph. 02 4927 0903
Fax. 02 4927 0683
mail@edc-drafting.com
Sydney
Ph. 02 9251 6706
Fax. 02 9251 6707
www.edc-drafting.com
enterprise | drafting | company
902 Hunter Street Newcastle West NSW 2302

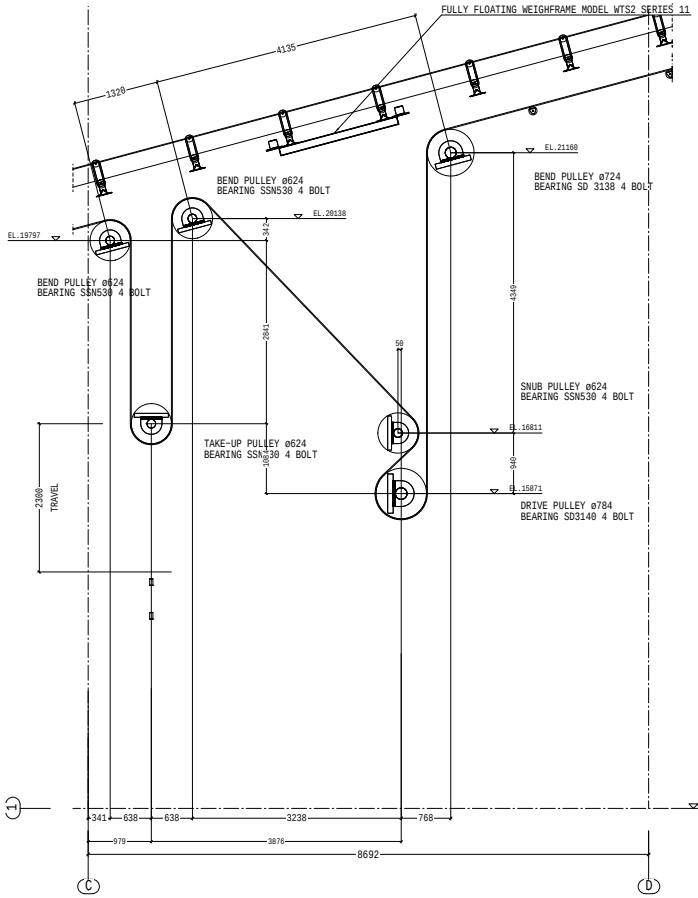
THIS DRAWING IS CONFIDENTIAL AND IS THE PROPERTY OF ENTERPRISE DRAFTING COMPANY AND MUST NOT BE COPIED IN WHOLE OR PART OR ADAPTED AND/OR LENT WITHOUT PRIOR WRITTEN APPROVAL TO DO SO FROM ENTERPRISE DRAFTING COMPANY

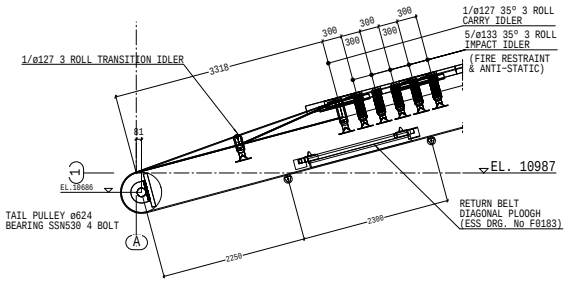
DRAWN	J.DIMMOCK	DATE MAR. 2009
CHKD	EDC	DATE MAR. 2009
REFERENCE DRAWINGS	08116-0000	
SCALE	NTS	

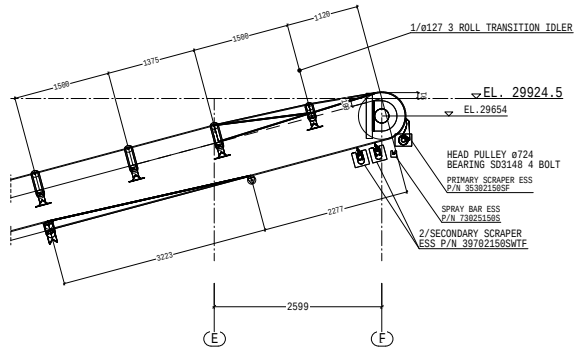
CLIENT: Newcastle Coal Infrastructure Group
PROJECT: BUFFER BIN BN01 - FEEDERS TAIL & SUPPORT STEELWORK
TITLE: SOUTH/EAST OVERALL ISOMETRIC

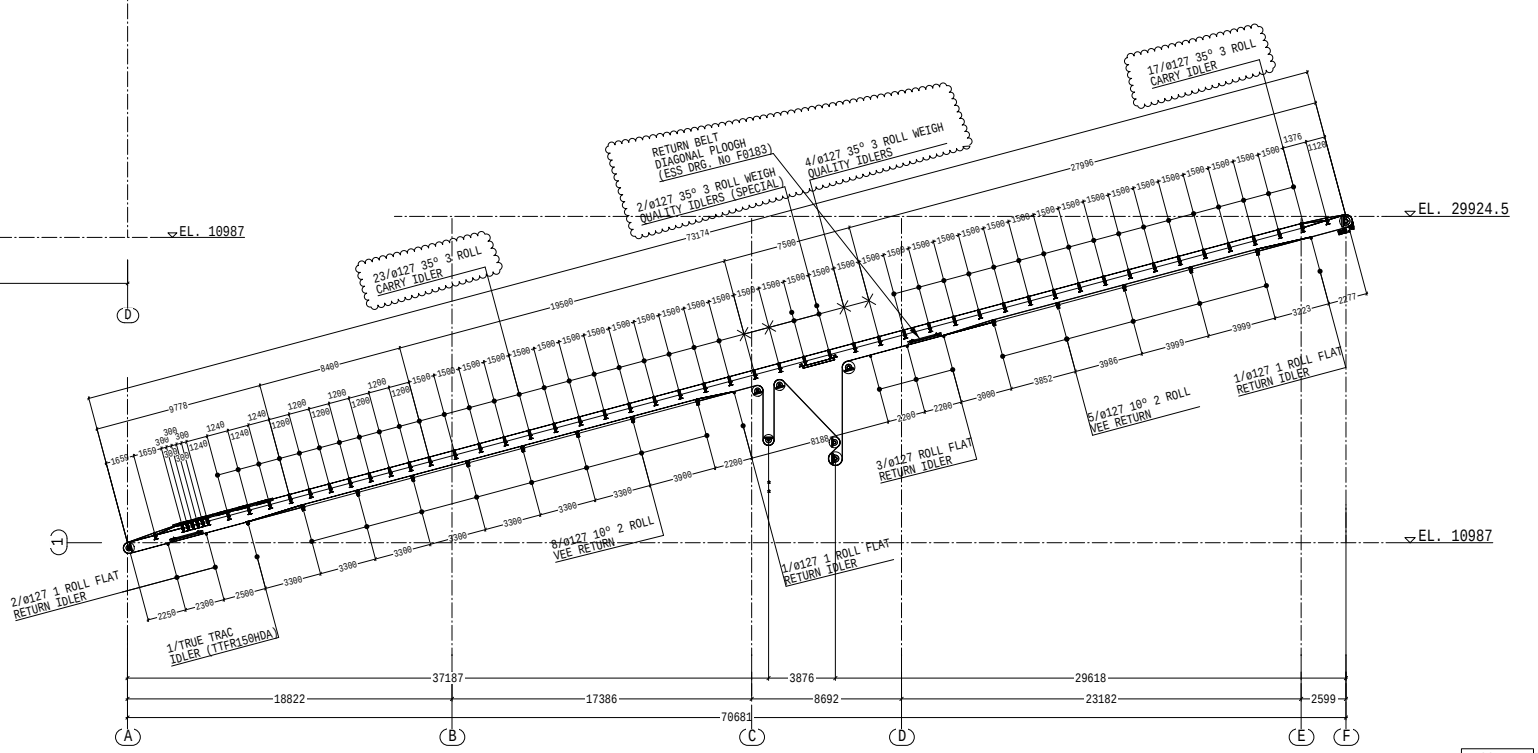
CAD FILE No. 08116_4000
NCIG DGN No. HW00-C305.02-S-35630
DRAWING No. 08116-4000
REV. A

B1 ▼ INDICATES LOCATION OF MARK NUMBER FOR ORIENTATION









1500 BELT

THIS SCALE FULL SIZE ON ORIGINAL DRAWING
0 20 40 60 80 100 120 140 160 180 200 220 240 MILLIMETRES

REV	DETAILS OF REVISION	NAME	DATE	VARIATION NO.
2	IDLERS AMENDED; RE-ISSUED FOR APPROVAL & THEN FOR CONSTRUCTION	J.DIMMOCK	26.02.2008	XX
1	ISSUED FOR APPROVAL & THEN FOR CONSTRUCTION	J.DIMMOCK	14.12.2007	XX
0	INTERNAL ISSUE	M.BAJOREK	29.09.2007	XX

GENERAL NOTES
1. ALL DIMENSIONS ARE IN mm. U.N.O.
2. FLAME CUT SURFACES TO BE UNIFORM AND CLEAN BEFORE WELDING
3. ALL FILLET WELDS TO BE 6 mm CONTINUOUS U.N.O.
4. ALL FILLETS TO BE A MINIMUM OF 11 rad. U.N.O.
5. ALL ASSEMBLIES TO BE CLEARLY MARKED.
6. ALL MATERIAL TO BE TO A.S. 4100
7. FOR SURFACE TREATMENT REFER TO PAINT SPECIFICATIONS
8. ALL WORKMANSHIP & WELDING SHALL BE IN ACCORDANCE WITH AS 4100 & AS 1554 PART 1 CAT. SP

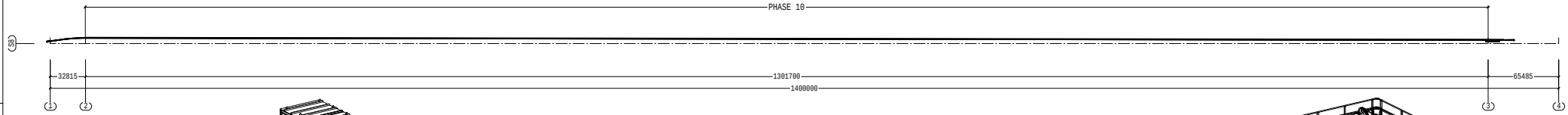
ENG CONS: RINMONT ENGINEERS PTY LTD
CONSULTING PROJECT ENGINEERS
Drawing No. L913-M-102
DO NOT SCALE PROJECTION
Newcastle Ph. 02 4927 0800 Fax. 02 4927 0801 mail@edcgroup.com.au
Sydney Ph. 02 9251 0788 Fax. 02 9251 0787 www.edcgroup.com.au
enterprise | drafting | company
982 Hunter Street Newcastle West NSW 2302

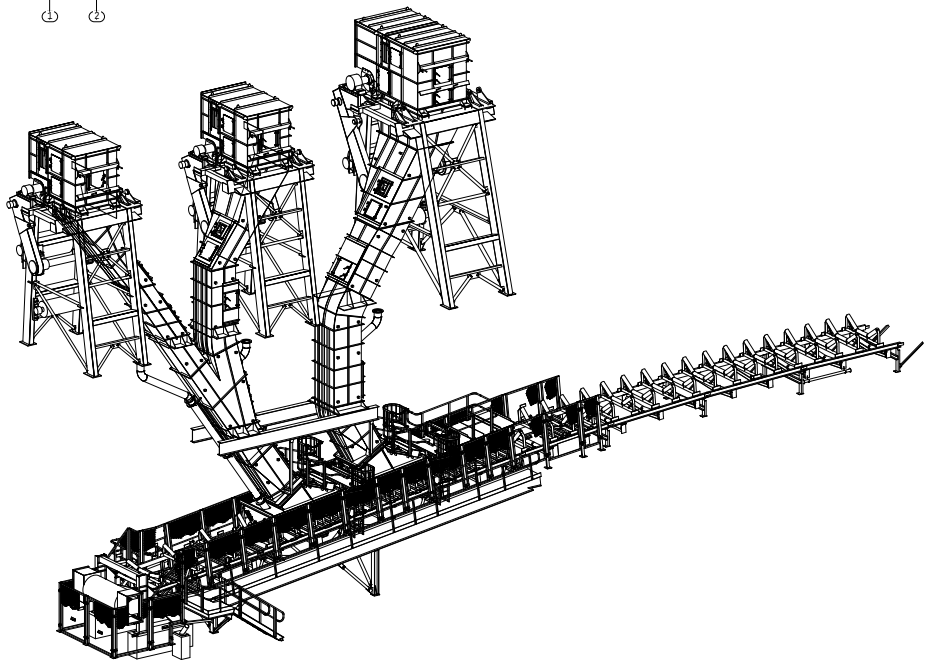
THESE DRAWINGS ARE CONFIDENTIAL AND AS SUCH REMAIN THE PROPRIETORY RIGHT OF EDC DRAFTING ENTERPRISE. ANY UNAUTHORISED USE OF THESE DRAWINGS IN PART OR WHOLE IS STRICTLY PROHIBITED. © COPYRIGHT EDC DRAFTING ENTERPRISE. DRAFTSMAN COMPANY

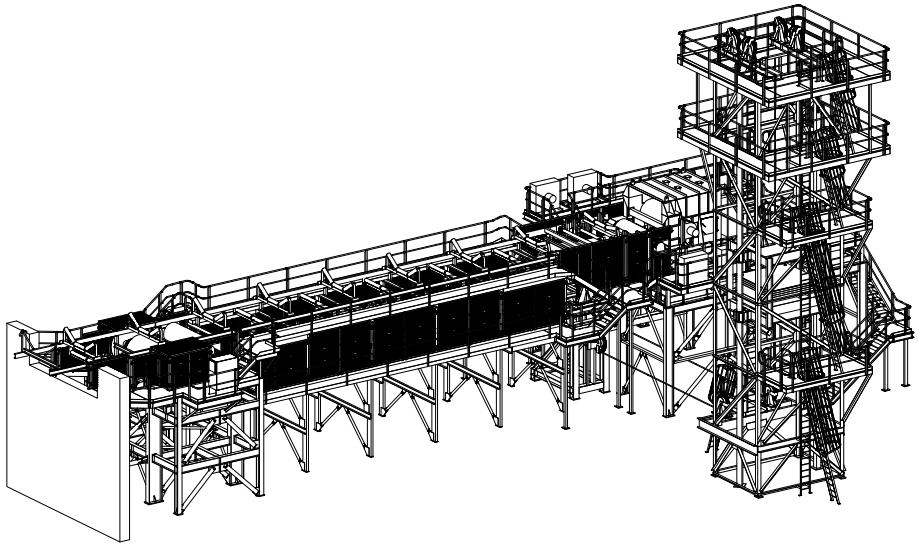
DRAWN	M.BAJOREK
DATE	SEP.2007
CHKD	
DATE	
EDC	SEP.2007
REFERENCE DRAWINGS	07100-0000
SCALE	NTS

CLIENT: DONALDSON COAL
PROJECT: ABEL STACKOUT CONVEYOR
TITLE: BELT PROFILE
CAD FILE No. 07100-0002_2
DRAWING No. 07100-0002
REV. 2
EDC JOB No. 07100

B1 ▼ INDICATES LOCATION OF MARK NUMBER FOR ORIENTATION



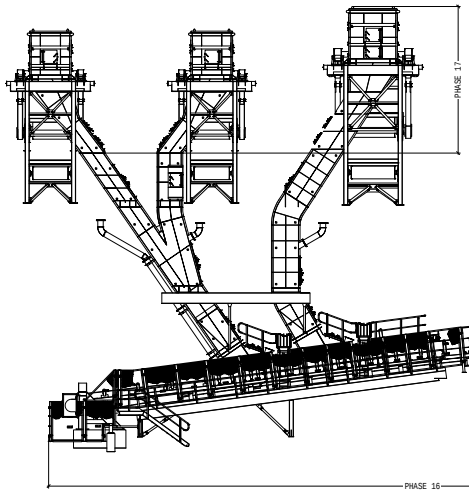




REFERENCE DRAWINGS

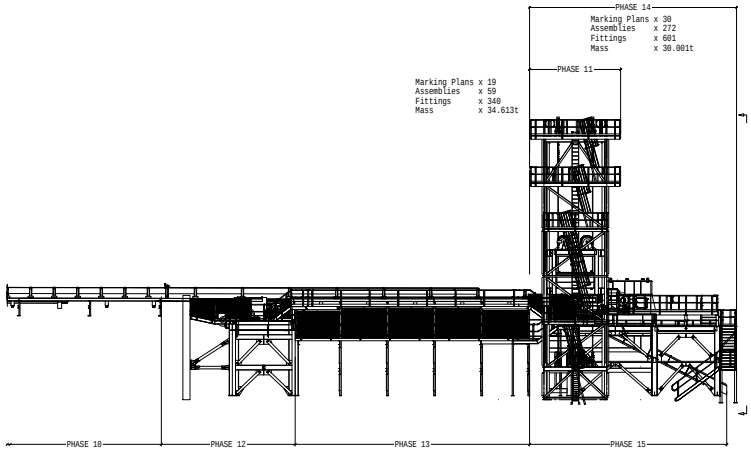
PHASE 10 ... S8 GROUND MODULES	... 07108-10000
PHASE 11 ... S8 GTU & TAKE UP TOWER	... 07108-11000
PHASE 12 ... S8 BRAKE FRAME	... 07108-12000
PHASE 13 ... S8 TRETLE FRAME	... 07108-13000
PHASE 14 ... S8 DRIVE FRAME	... 07108-14000
PHASE 15 ... S8 HEAD CHUTES	... 07108-15000
PHASE 16 ... S8 TAIL CHUTES	... 07108-16000
PHASE 17 ... S8 S3/S4/S13 TRIPPER CHUTES	... 07108-17000

Marking Plans x 143
Assemblies x 943
Fittings x 2935
Mass x 252.473t



Marking Plans x 12
Assemblies x 70
Fittings x 352
Mass x 25.596t

Marking Plans x 28
Assemblies x 247
Fittings x 867
Mass x 38.236t



Marking Plans x 30
Assemblies x 272
Fittings x 601
Mass x 30.001t

Marking Plans x 19
Assemblies x 59
Fittings x 340
Mass x 34.613t

Marking Plans x 17
Assemblies x 54
Fittings x 69
Mass x 87.899t

Marking Plans x 18
Assemblies x 102
Fittings x 391
Mass x 15.648t

Marking Plans x 16
Assemblies x 115
Fittings x 143
Mass x 13.356

Marking Plans x 3
Assemblies x 24
Fittings x 172
Mass x 7.126t

REV	DETAILS OF REVISION	NAME	DATE	VARIATION NO.
0	ISSUED FOR APPROVAL & THEN FOR CONSTRUCTION			

BABCOCK & BROWN INFRASTRUCTURE (DBCT)

Connell HATCH

GENERAL NOTES
1. ALL DIMENSIONS ARE IN mm. U.N.O.
2. FLAME CUT SURFACES TO BE UNIFORM AND CLEAN BEFORE WELDING
3. ALL FILLET WELDS TO BE 6 mm CONTINUOUS U.N.O.
4. ALL FILLETS TO BE A MINIMUM OF 11 rad. U.N.O.
5. ALL ASSEMBLIES TO BE CLEARLY MARKED.
6. ALL MATERIAL TO BE TO A.S. 4100
7. FOR SURFACE TREATMENT REFER TO PAINT SPECIFICATIONS
8. ALL WORKMANSHIP & WELDING SHALL BE IN ACCORDANCE WITH AS 4100 & AS 1554 PART 1 CAT. SP

DO NOT SCALE

KINGDEPANG ENGINEERING Pty Ltd
A.B.N. 43 010 306 023
PO Box 5072, Milton QLD 4064
3rd Level, 333 Coronation Drive
Milton QLD 4064
Ph. (07) 3368 4700 Fax. (07) 3368 4777

enterprise | drafting | company
982 Hunter Street Newcastle West NSW 2302
Newcastle Ph. 02 4927 6588 Fax. 02 4927 6588 mail@edc-drafting.com
Sydney Ph. 02 9251 6788 Fax. 02 9251 6787 www.edc-drafting.com

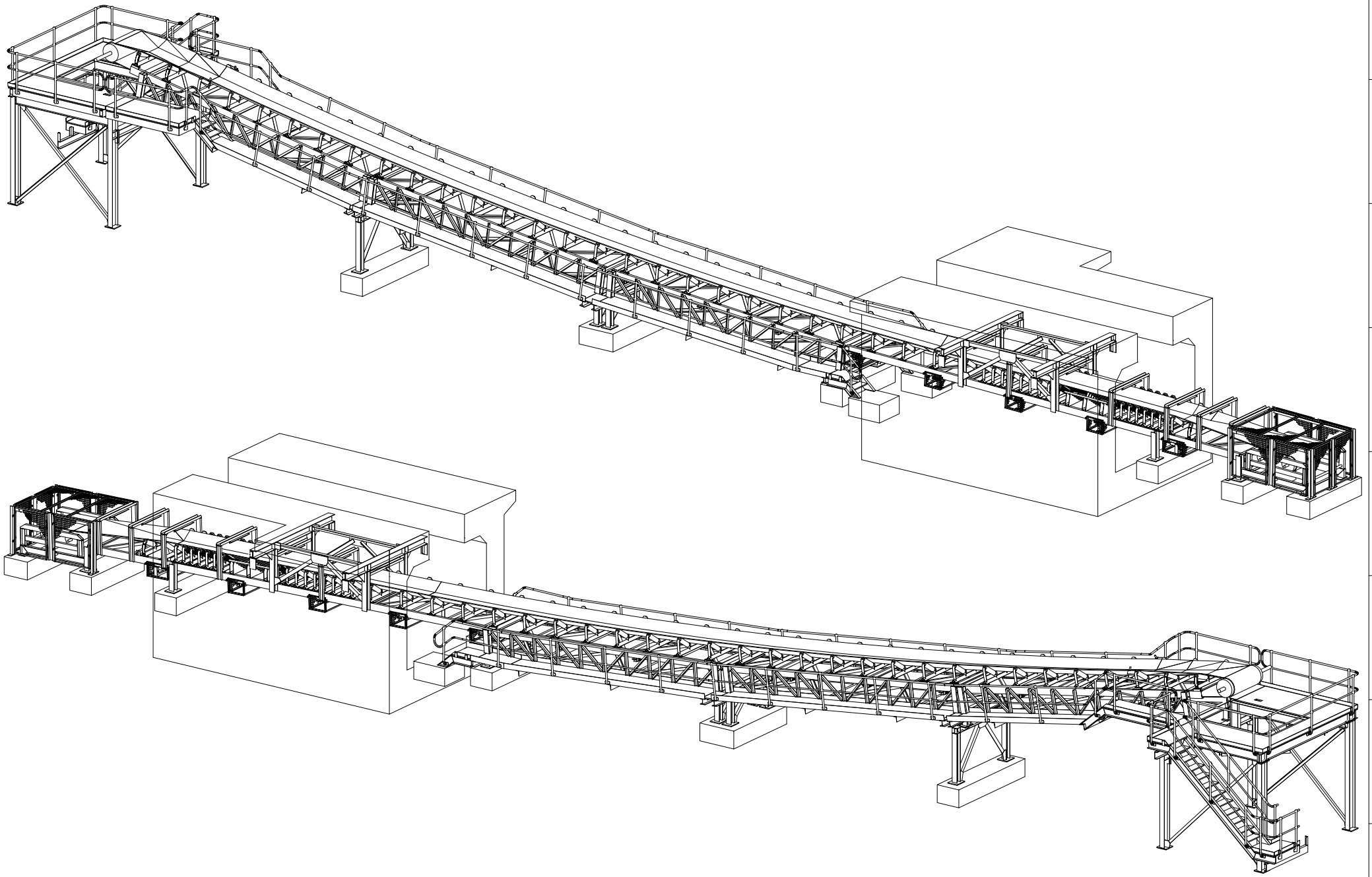
THIS DRAWING IS CONFIDENTIAL AND IS THE PROPERTY OF ENTERPRISE DRAFTING COMPANY PTY LTD. IT MUST NOT BE COPIED OR USED IN ANY MANNER WHATSOEVER WITHOUT THE EXPRESS PERMISSION OF ENTERPRISE DRAFTING COMPANY

DRAWN M.BAJOREK DATE APR.2008
CHKD DATE
ENG. APR.2008
REFERENCE DRAWINGS 07108-XXXX
SCALE NTS

CLIENT: Dalrymple Bay Coal Terminal
PROJECT: DBCT 7X - S8 Conveyor
TITLE: OVERALL ARRANGEMENTS
CAD FILE No. 07108-S8-LAYOUT_0
DBCT DGN No. XX
DRAWING No. 07108-S8-LAYOUT
REV. 0

THIS SCALE FULL SIZE ON ORIGINAL DRAWING
0 20 40 60 80 100 120 140 160 180 200 220 240 MILLIMETRES

B1 ▼ INDICATES LOCATION OF MARK NUMBER FOR ORIENTATION



THIS SCALE FULL SIZE ON ORIGINAL DRAWING
0 20 40 60 80 100 120 140 160 180 200 220 240 MILLIMETRES

REV	DETAILS OF REVISION	NAME	DATE	VARIATION NO.
1	ALTERED TO SUIT DESIGN CHANGE	M.BAJOREK	29.06.2005	XX
0	ISSUED FOR APPROVAL & THEN FOR CONSTRUCTION	M.BAJOREK	02.06.2005	XX

GENERAL NOTES
1. ALL DIMENSIONS ARE IN mm. U.N.O.
2. FLAME CUT SURFACES TO BE UNIFORM AND CLEAN BEFORE WELDING
3. ALL FILLET WELDS TO BE 6 mm CONTINUOUS U.N.O.
4. ALL FILLETS TO BE A MINIMUM OF 11 rad. U.N.O.
5. ALL ASSEMBLIES TO BE CLEARLY MARKED.
6. ALL MATERIAL TO BE TO A.S. 4100
7. FOR SURFACE TREATMENT REFER TO PAINT SPECIFICATIONS
8. ALL WORKMANSHIP & WELDING SHALL BE IN ACCORDANCE WITH AS 4100 & AS 1554 PART 1 CAT. SP

EDC Client
LIFESE ENGINEERING
5 JUNCTION STREET
AUBURN NSW 2144
Ph. (02) 9748 9444
Fax.(02) 9648 9984

DO NOT SCALE
PROJECTION

Newcastle
Ph. 02 4929 6510
Fax. 02 4929 1129
mail@edc-drafting.com
Sydney
Ph. 02 9251 6788
Fax. 02 9251 6787
www.edc-drafting.com
enterprise | drafting | company
103 King Street Newcastle NSW 2300

THIS DRAWING IS CONFIDENTIAL AND IS THE PROPERTY OF ENTERPRISE DRAFTING COMPANY. IT IS SUPPLIED ON THE EXPRESS CONDITION THAT IT SHALL NOT BE COPIED OR USED IN ANY WAY WITHOUT THE PERMISSION OF ENTERPRISE DRAFTING COMPANY

DRAWN	M.BAJOREK
DATE	MAY 2005
CHKD	ERC
DATE	MAY 2005
REFERENCE DRAWINGS	04121-3100
SCALE	NTS

CLIENT:
PROJECT:
TITLE: LIFESE ENGINEERING
HARTLEY QUARRY STAGE 1 DEVELOPMENT
CONVEYOR C1 OVERALL ISOMETRICS

CAD FILE No.	04121-3000_1
EDC JOB No.	04121
DRAWING No.	04121-3000
REV.	1